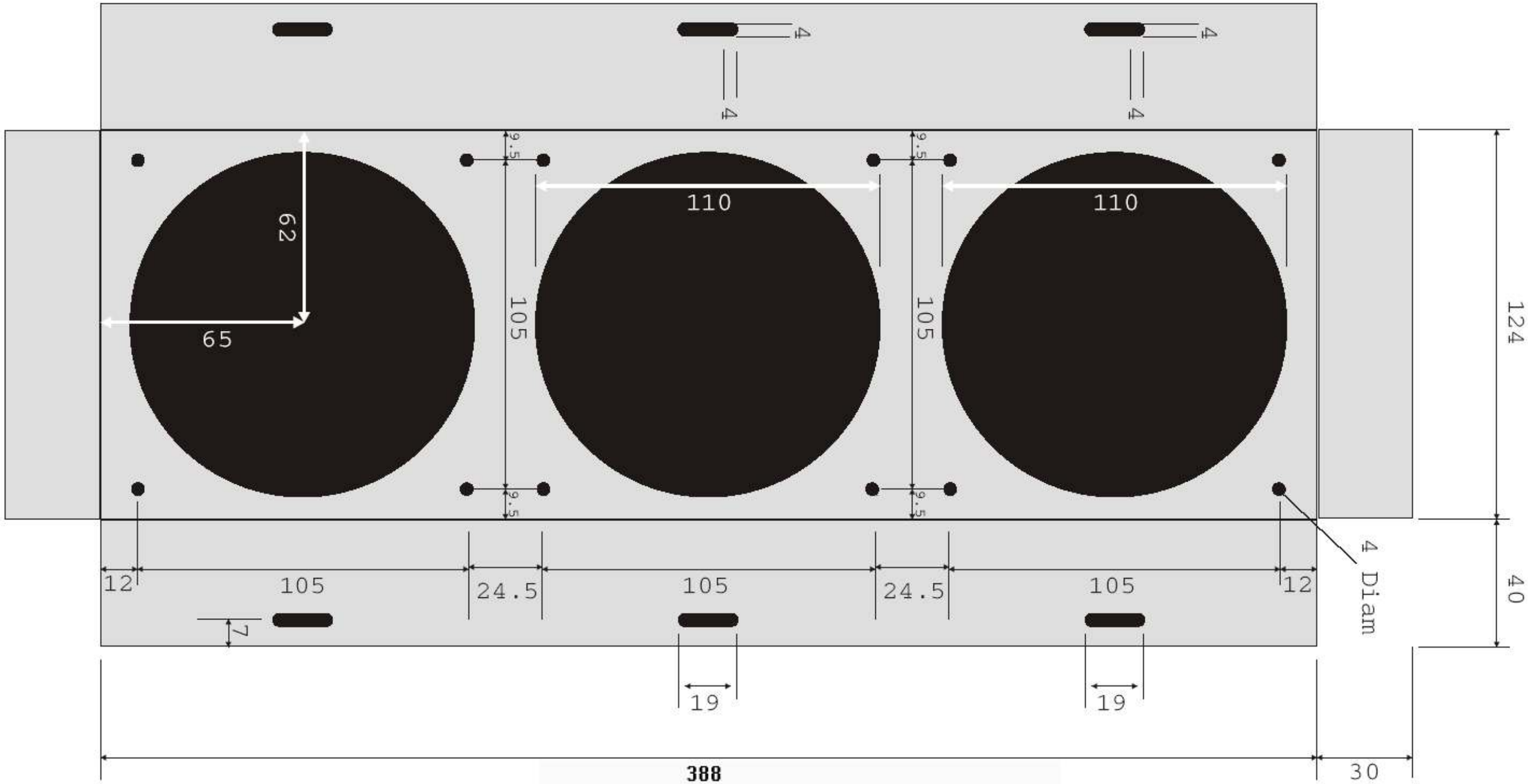


UNITS: MM www.thermochill.com MACoyles - 23/9/04

MATERIAL: 2mm Aluminium Sheet ThermoChill HE120.3 Shroud MkIII